SEATS

Completely Made in Italy seat designed and produced entirely by Fadiel Italiana

SED0030

SED0030-XL

HIGH-QUALITY ITALIAN CRAFTSMANSHIP	The foam used is Italian-made and ensures one of the highest quality standards, allowing the seat to maintain its shape even after years of use.The external upholstery is crafted from top-quality materials and is entirely handmade, with shaping and stitching performed completely by hand.
COMPATIBILITY	The Fadiel Italiana seat is designed to be installed on various bases, including swivel bases and the C400, EC400, EC480, and SU400 bases.
SIZE COMPACT	Thanks to its compact dimensions, the seat fits a wide range of vehicles, even those with a narrow door opening. The design allows for easy entry and exit from the vehicle.
COMFORT AND SAFETY	The shape of the foamensures a comfortable and secure seating position, providing stability for the user.
QUICK RELEASE BACKREST	It is equipped with a side lever featuring an ergonomic handle that allows the backrest to be tilted quickly and easily, making the operation simple and intuitive.
OPTIONAL ARMRESTS	The seat can also be supplied with armrests on request.

FADIEL - via Delle Industrie, 5 I-L, 30020 Meolo (VE) - tel +39.0421.345430 - fax +39.0421.618336 - www.fadiel.com - info@fadiel.com

CODE

SED0030 - DIMENSIONS

dimensions in mm

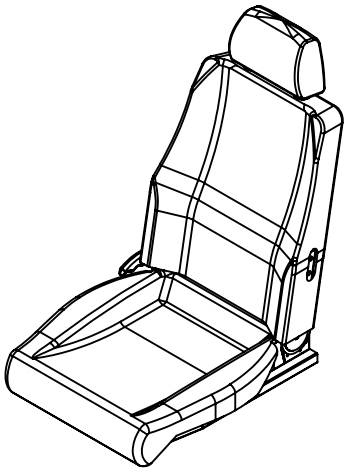

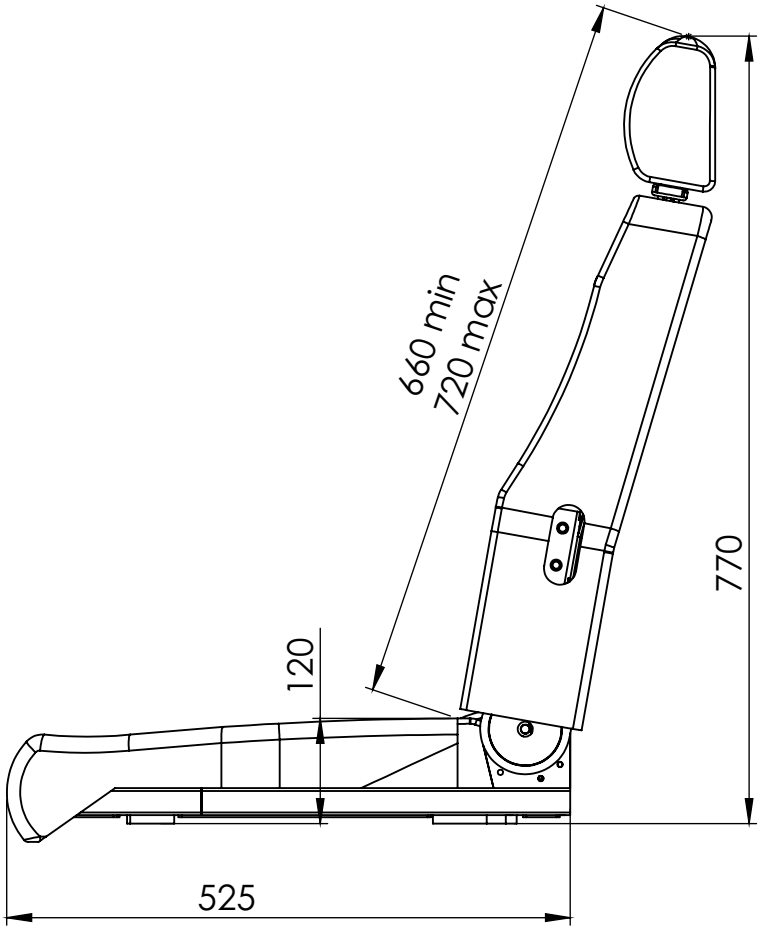

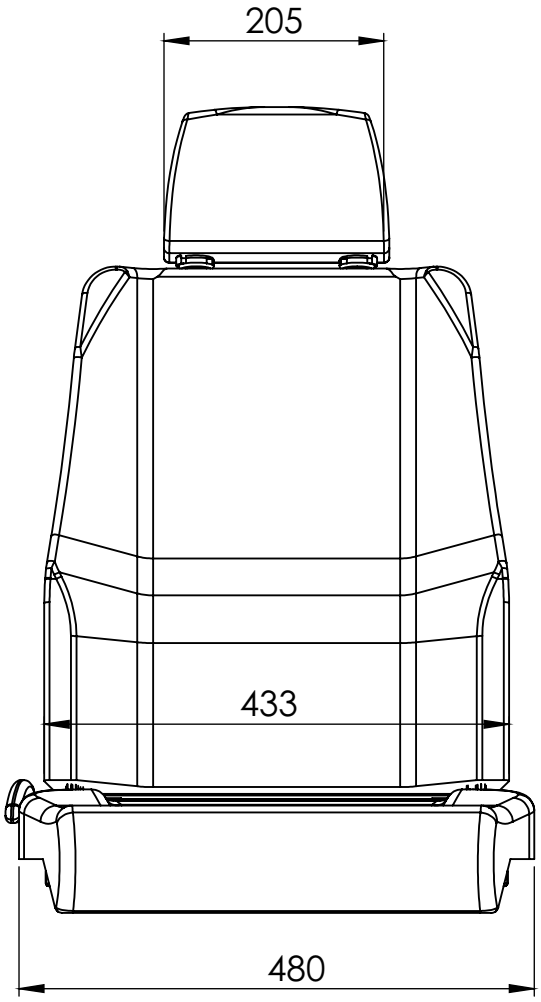

FADIEL - via Delle Industrie, 5 I-L, 30020 Meolo (VE) - tel +39.0421.345430 - fax +39.0421.618336 - www.fadiel.com - info@fadiel.com

CODE

SED0030-XL - DIMENSIONS

dimensions in mm

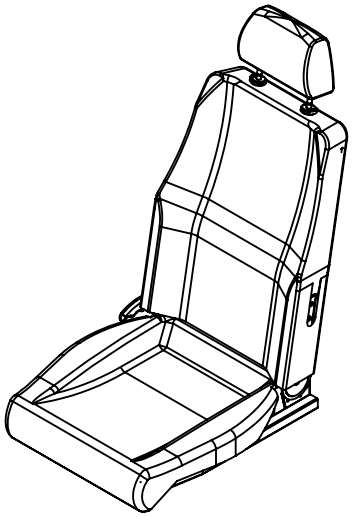

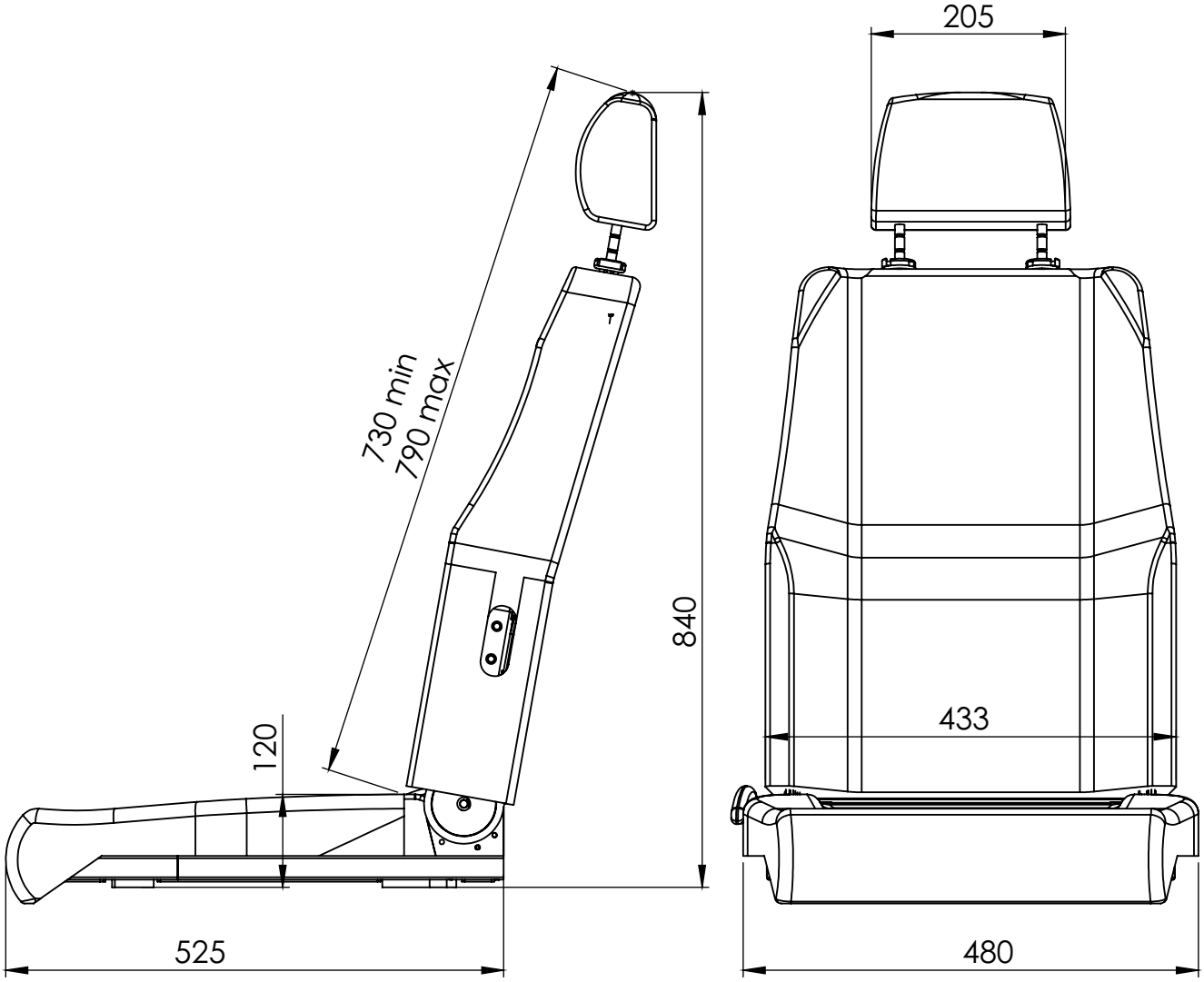

FADIEL - via Delle Industrie, 5 I-L, 30020 Meolo (VE) - tel +39.0421.345430 - fax +39.0421.618336 - www.fadiel.com - info@fadiel.com

SEAT ACCESSORIES

	DESCRIPTION	CODE
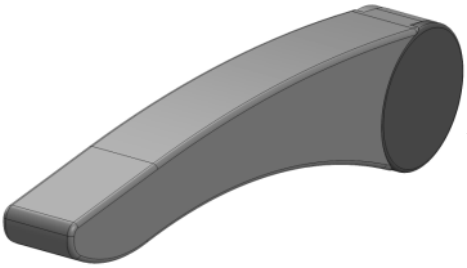	Armrest for reclining seat	Right 108055 Left 108056
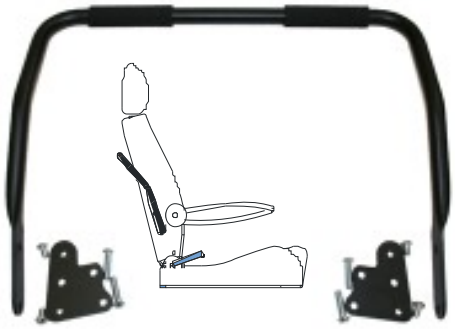	Push handle To be combined with the reclining seat for the transfer trolley set-up	SED0030 108134 SED0030-XL 108141

FADIEL - via Delle Industrie, 5 I-L, 30020 Meolo (VE) - tel +39.0421.345430 - fax +39.0421.618336 - www.fadiel.com - info@fadiel.com

FADIEL ITALIANA

FADIEL - via Delle Industrie, 5 I-L, 30020 Meolo (VE) - tel +39.0421.345430 - fax +39.0421.618336 - www.fadiel.com - info@fadiel.com